Howard Auto Cultivatoren Ltd.

In 1912 begon Arthur Clifford op de boerderij van zijn vader in het Australische Gilgandra met het ontwikkelen van een machine om de grond mechanisch te bewerken zonder een ploegvoor achter te laten.

Hij bedacht een L vormig mes dat aan een as met kleine diameter dat aangedreven werd met een kleine brandstof motor en de eerste, wat we nu freesmachine is, was geboren. In 1920 had Howard 5 patenten voor de vorm van de bladen en de constructie met de motor.

In 1922 werd de Austral Auto Cultivators Pty Ltd opgericht. Enkele jaren later werd de naam veranderd naar Howard Auto Cultivators. De fabriek in Northmead bij Sidney was te klein om de wereld vraag naar deze machine aan te kunnen en Howard opende vestigingen over de gehele wereld.

Naast freesmachines worden er door Howard ook weilandbloters, maaiers, spitmachines gebouwd.

In 1985 werd de totale Howard groep overgenomen door de Deense Thrige Agro Group en deze groep werd in 2000 toegevoegd aan de Kongskilde groep. Inmiddels CNH

Zie ook : http://howardgem.webs.com/

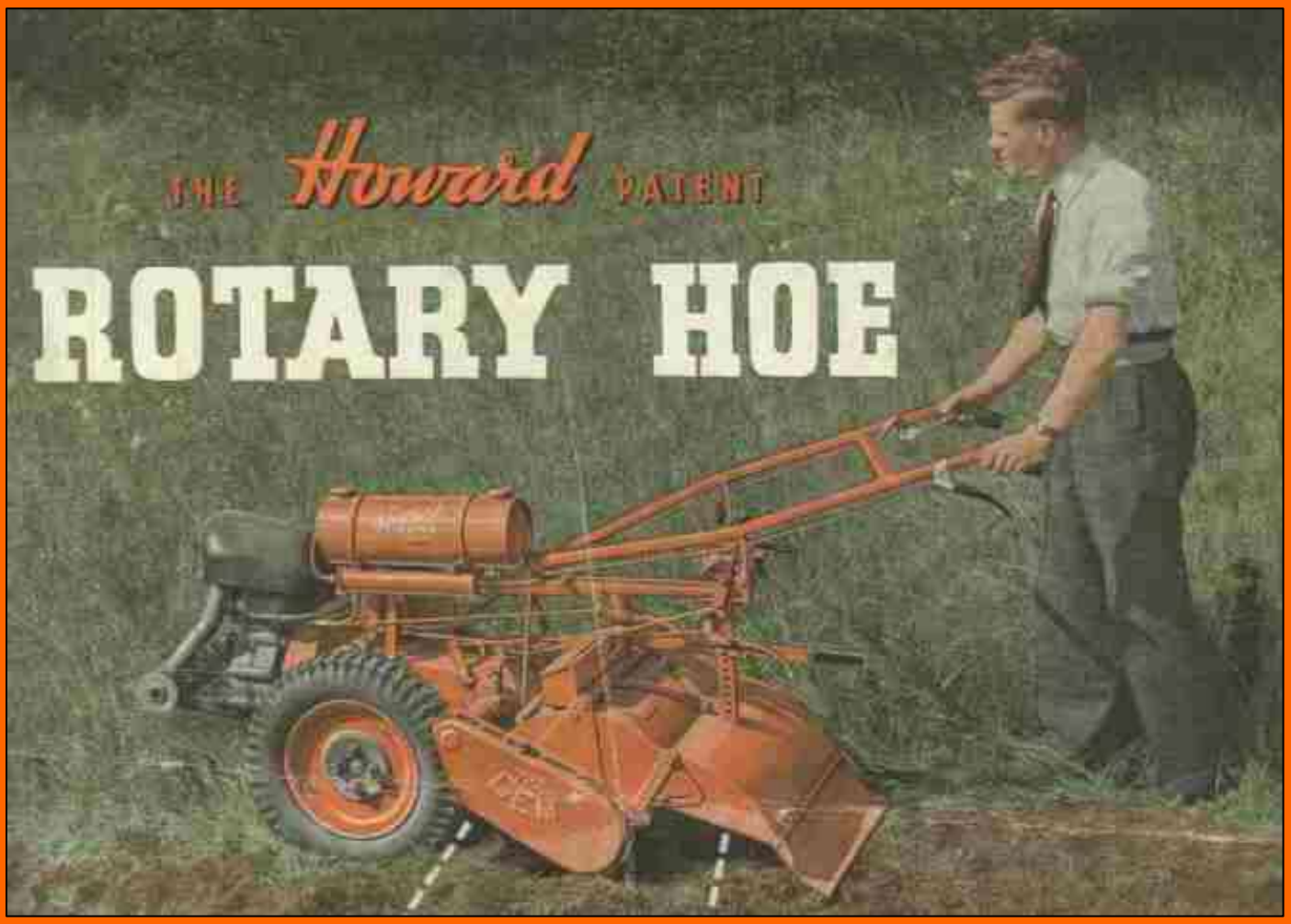
THE Howard PATENT
ROTARY HOE

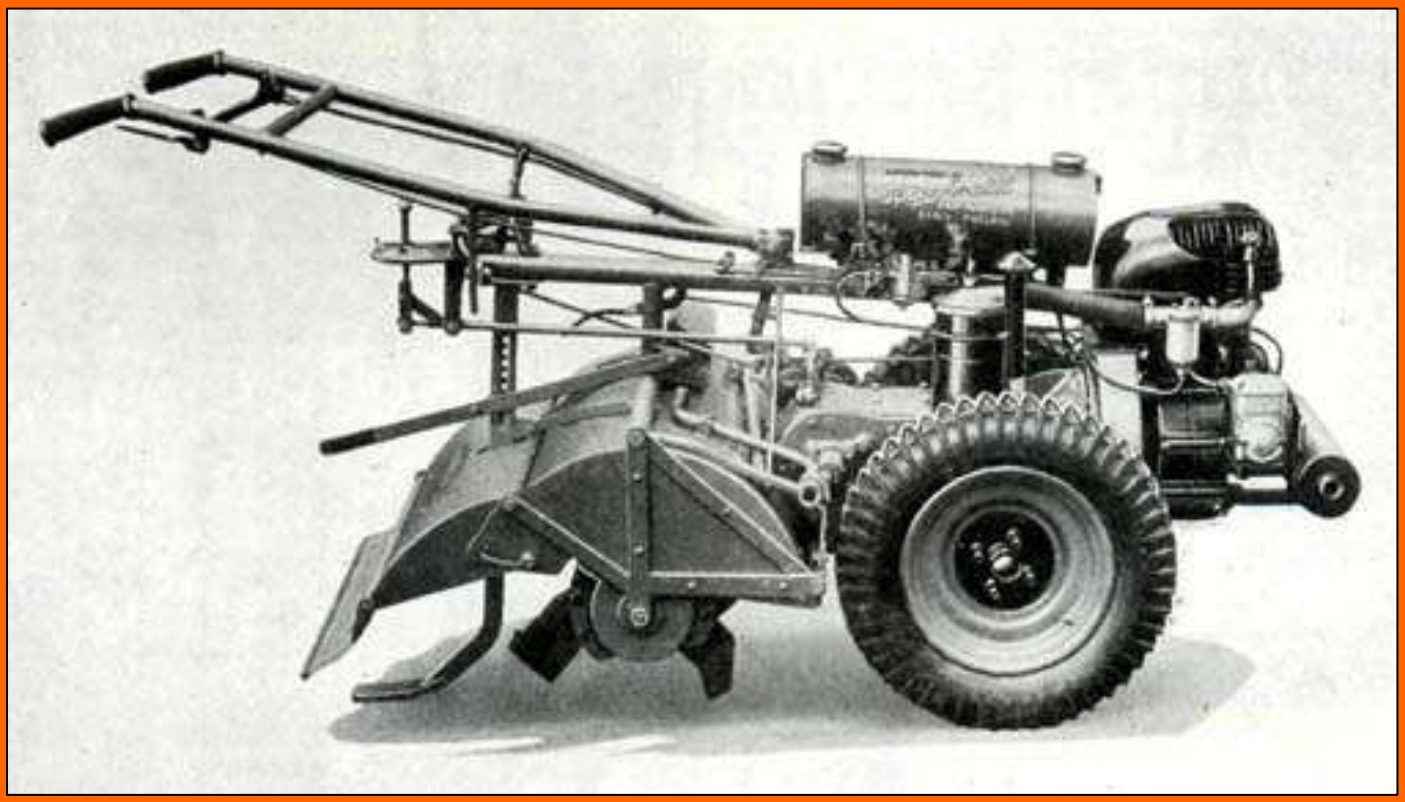

55,000 owners
have proven the

HOWARD
ROTAVATOR

GEM

the leader in its class
of self-propelled
cultivators

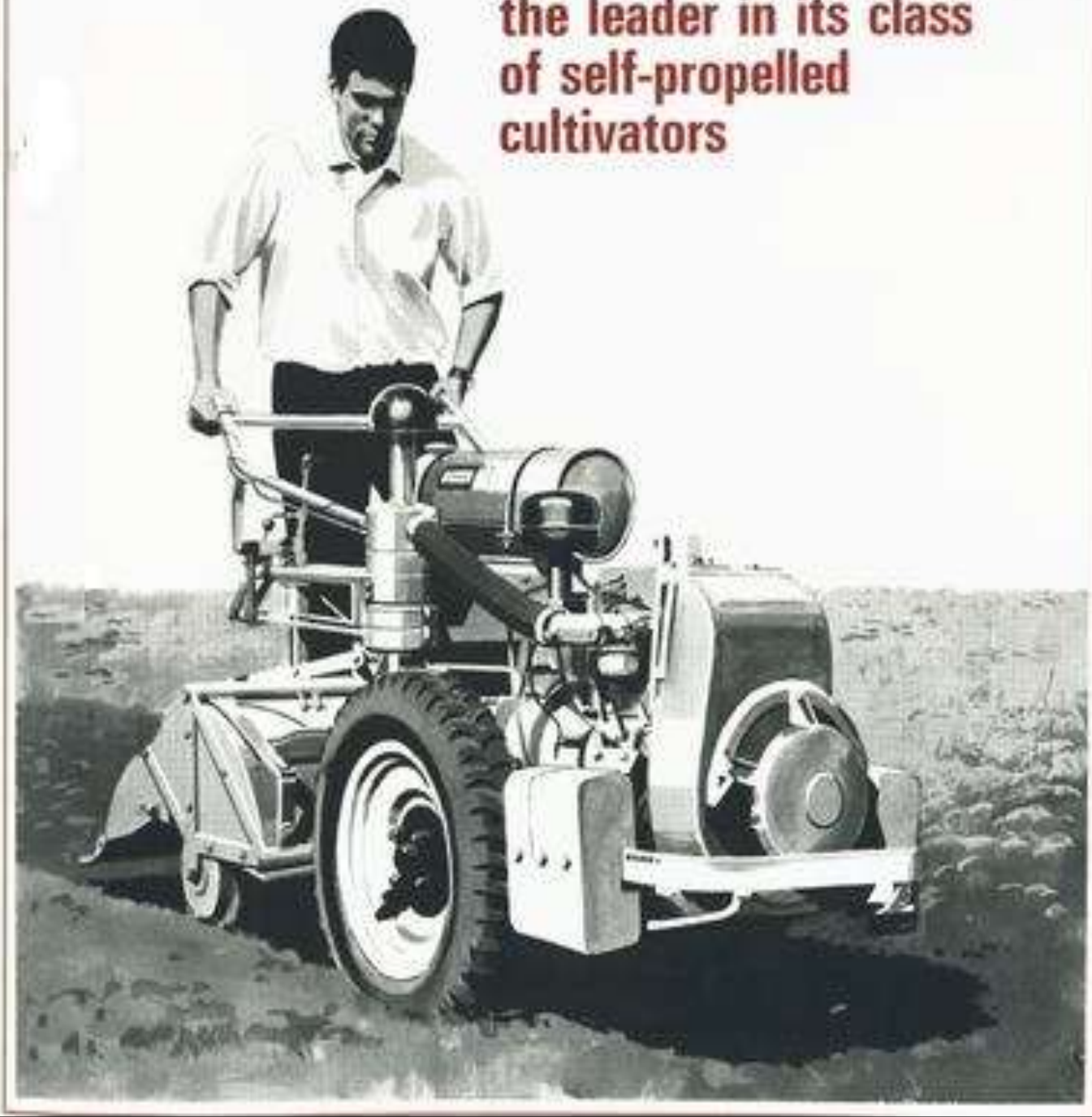

Market Gardeners, Farmers, Landscapers and Contractors will profit from the work power of the GEM

If you want perfect seedbeds, if you need to mix-in manure, fertilisers, green crops and get a quick turn-round between crops, you need the slice-loosen-mix action of the Gem blades. If you are faced with land reclamation, post-harvest cleaning, catch cropping, turning-in green crops, weed control, breaking pasture land—you can use all the versatility of the Gem. The Gem is the top of the power range, with 3 forward speeds and 1 reverse. The power unit is a Kohler 12 h.p. 4 Stroke petrol engine. Rotor width is 20" or 24".

SPECIFICATIONS

ENGINE: Kohler 477 cc 4-stroke air-cooled petrol.

TRANSMISSION: 3 forward speeds and reverse. All drive shafts bearing-mounted. Full differential with automatic locking on engaging the rotor. Safety clutch with slip action when under shock load.

CLUTCH CONTROLS: Heavy duty 2-plate dry type.
1. Clutch
2. Throttle
3. Gear lever with spring-out safety reverse position.
4. Handlebars adjustable for height and sideswing.
5. Rotor selector.
6. Depth setting lever.

ROTAVATOR: Rotor speed 170 rpm at 2000 engine rpm. Rotor width 20 in. (50 cm) 24 in. (60 cm). Tillage depth adjustable down to 9 in.

WHEELS: 20 in. (51 cm) tyres. Tyre pressure 20 lb sq in.

LANDSPEEDS at 2000 rpm:
1st gear 0.9 mph (1.4 kph)
2nd gear 1.3 mph (2.1 kph)
3rd gear 2.8 mph (4.5 kph)
Reverse 1.7 mph (2.7 kph)

DIMENSIONS AND WEIGHT

Cultivating width	Overall width	Weight
20" (50 cm)	28" (80 cm)	644 lb (292 Kg)
24" (60 cm)	30" (76 cm)	672 lb (305 Kg)

Overall length 8 ft. 8 in. (2.63 m)

HOWARD ROTAVATOR

HOWARD ROTAVATOR PTY. LTD.
Boundary Road, Northmead, N.S.W. TELE: 630 1231
TELEX 21328
Member of the Howard Rotavator Group, World's largest manufacturer of rotary tillage equipment.
ENGLAND, FRANCE, GERMANY, ITALY, NEW ZEALAND, SOUTH AFRICA, U.S.A.

Howard

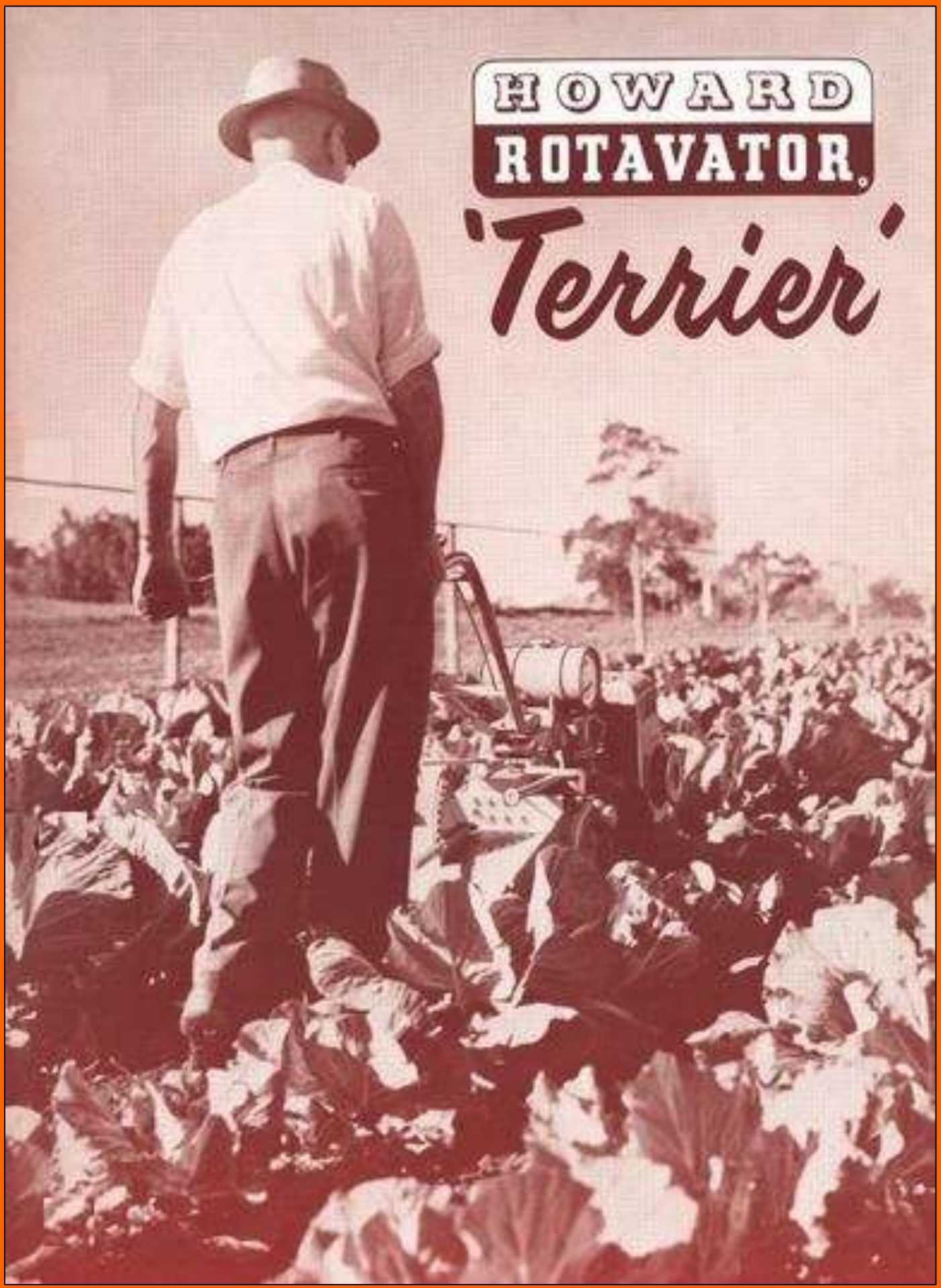
HOWARD
ROTAVATOR
'Terrier'

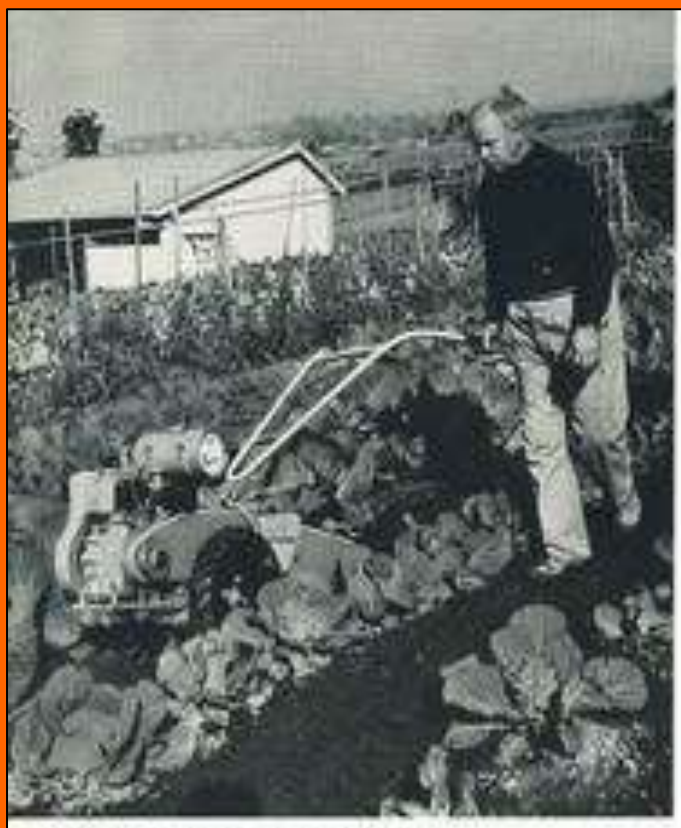

INTER-ROW CULTIVATING
Cutting width, 14". Self-propelled. Plant guard available.

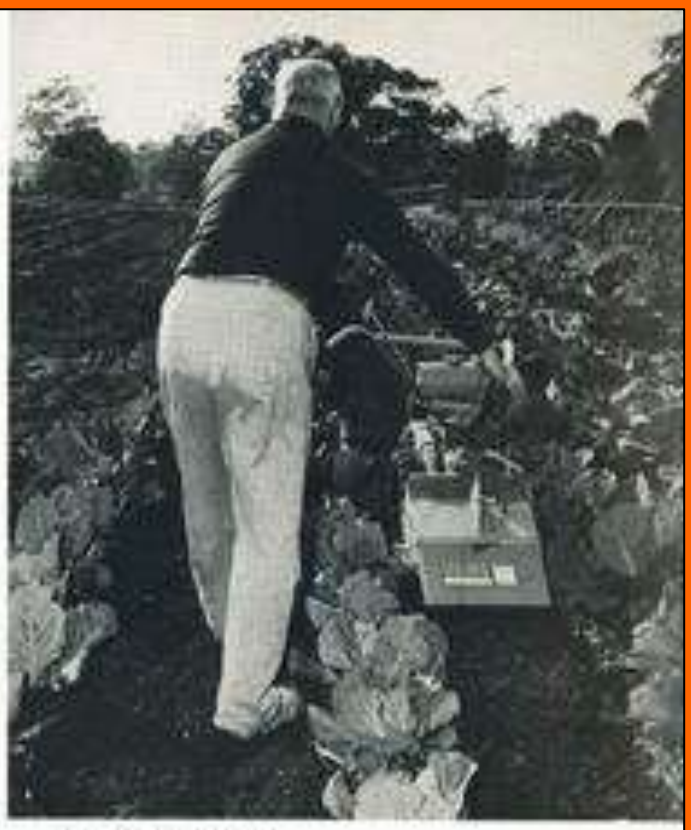

ROTARY HOE
The Terrier is self-propelled with power transmitted to the wheels and blades. Ground speed can be selected to match the cutting bite of the rotary hoe blades to produce a coarse tilth from unbroken ground or fine tilth for seed beds.

ROTARY MOWER
Heavy-duty rotary mower with 22" cutting width for lawn or rough cutting. Self-propelled, you just guide it. Easily attachable and detachable.

TRAILER CART
The self-propelled Terrier with trailer cart will take care of all carrying chores around the farm or market garden. Capacity 1 ton. Trailer has detachable tail-board, 54" long, 36" wide, 12" deep.

FURROWER
Two operations in one. Cultivate, hill and furrow in one operation with 20" furrower fitted to the depth skid.

TURNING VEGETABLE TRASH
Terrier with rear-mounted rotary hoe will chop and turn-in stubble and old crops, ultimately mixing the vegetation with the soil for quick decomposition, improving soil structure and fertility.

P.T.O.
The p.t.o. of the Terrier can be used to run circular saws, work benches, pumps, etc. The Terrier develops 6 h.p. at p.t.o.

ROW CROP LEAF GUARDS
Side shields give full protection to plants even when cultivating in close row crops.

SICKLE BAR MOWER
Sickle bar gives 36" swaths for small-area harvesting.

HOWARD ROTAVATOR

350

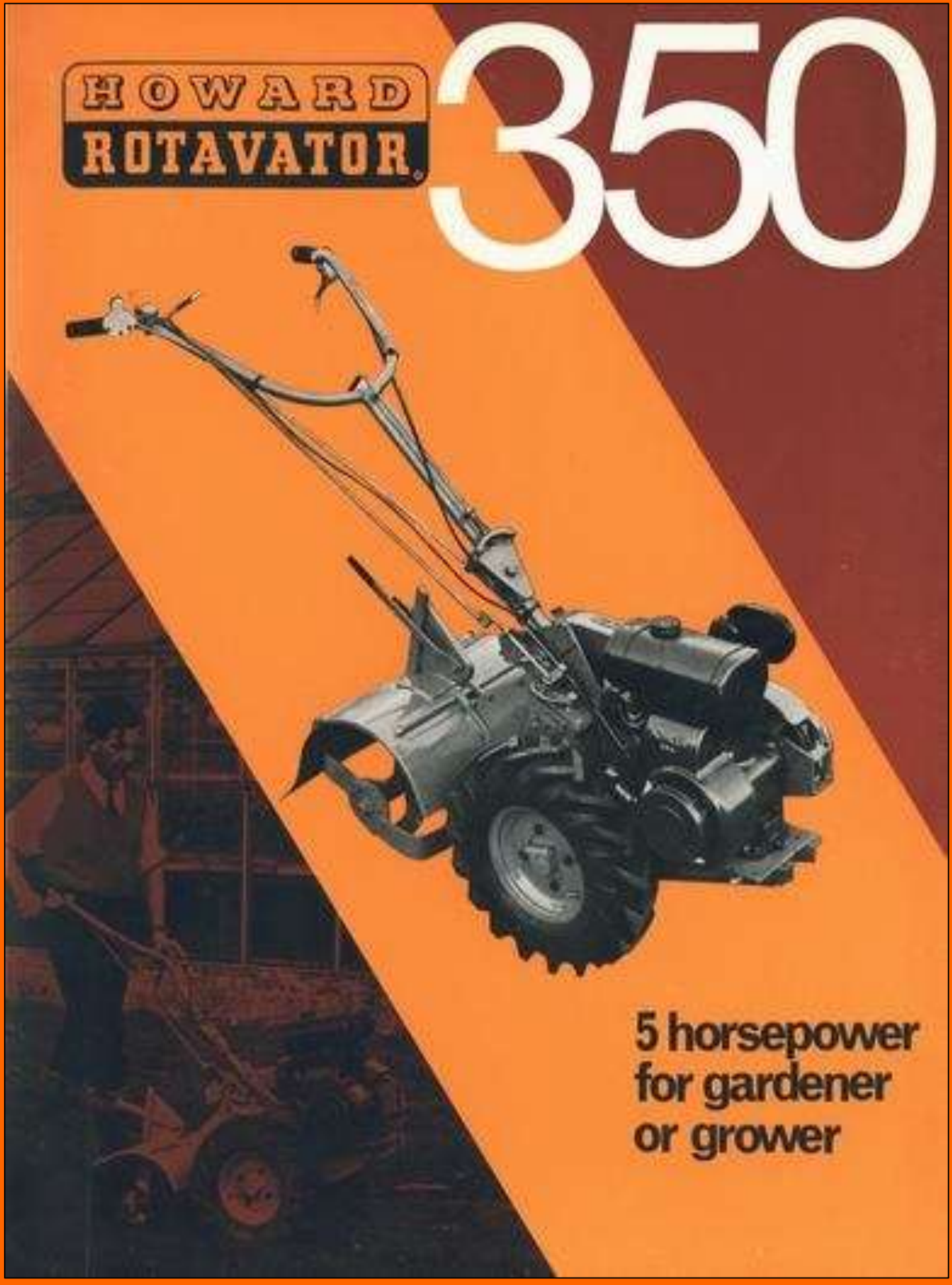

5 horsepower
for gardener
or grower

HOWARD
ROTAVATOR

350

5 HORSEPOWER

a new, versatile addition to the Howard Rotavator range of hand controlled rotavators.

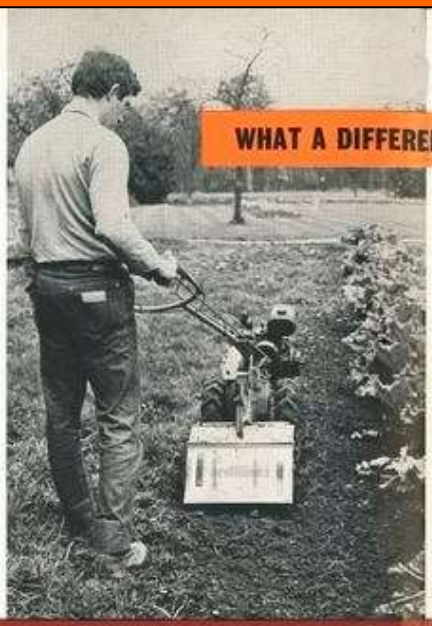

WHAT A DIFFERENCE A ROTAVATOR MAKES . . .

. . . to a private gardener or commercial grower. The particular horsepower now offered on this popular Rotavator gives the correct power for the work to be done. The 350 has a reliable 4-stroke petrol engine to turn the landwheels and drive the Rotavator blades through the soil. Alternative working widths of 16" or 23" (41 or 58 cms.) give flexibility of crop spacing and fast, economical tillage. For small or large working areas, the 5 h.p. 350 is the machine for sustained heavy or deep tillage. This rotavator will master many jobs, such as tough, hard digging, fast shallow cultivation, weeding, or turning-in spent crops. Additional attachments for increased versatility, some of them shown below, include a furrower, plough, trailer toolbar and side shields.

FURROWING

Used in conjunction with the Rotavator for opening up clean drills or hilling up row crops.

PLOUGHING

The single plough is capable of ploughing 6" deep and 6" wide in most soils. It has a knife coulter and full adjustment for correct setting.

SIDE SHIELDS

TOOLBAR WORK

The toolbar can be attached to either the front or rear of the machine for inter-row hoeing and weeding.

CULTIVATE!
don't just dig dirt

Whether cultivating the soil for profit or as a hobby, purely for pleasure. Whether in a small home garden or on broad acres, the soil is a National heritage which none should abuse, particularly at this time when hunger stalks the land of many countries.

These questions and answers are meant as a challenge to think and provoke the courage to change.

What is Rotavation?

Rotavation is mechanical tillage using revolving blades of a special design which cut, loosen and lift the soil for controlled tilths. The clod size is cut by the blades according to the controlled forward travel of the machine related directly to the speed of the cutting blades.

Why are Howard Rotavators always self-propelled?

A machine that depends on its forward movement by the action of the blades in the soil is the servant of the soil.

What do you mean by tilth?

Tilth refers to the clod structure in the cultivated soil. It is usual to follow the soil, say in Autumn, leaving the ground with a coarse or cloddy tilth to allow maximum moisture penetration and aeration. Again, fine seeds, such as carrots, require a fine tilth; while larger seeds, such as corn and beans, will germinate from a much coarser tilth.

Why do I need a Rotavator?

Reducing tillage operations cuts the cost of crop production. A Rotavator produces a controlled seedbed in the least number of passes over the soil, caring for the soil while it cultivates with the minimum of manual effort. A Rotavated seedbed, whether produced by a large machine on broad acres or a pedestrian machine in the home garden, holds moisture longer and warms up quicker to give better germination. At the same time, soil structure is improved to give higher production per acre to Feed the Hungry World.

THE PRINCIPLES OF ROTAVATION

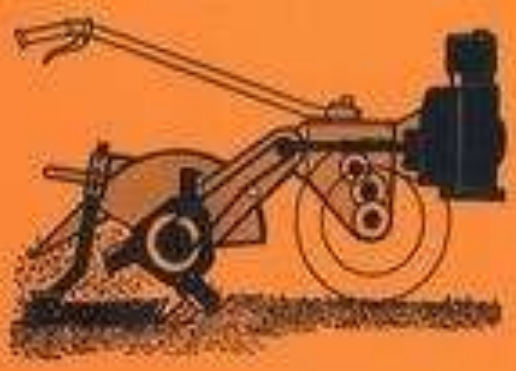

Rotavation is the direct application of engine power through a rotor and specially designed hoe blades to the soil. Here it is transformed into the most economical form of tillage. The purpose-made blades cultivate all the soil in their path, to produce an even mix of organic matter, soil and air. The Howard Rotavator, with power on the wheels, does this more ably than any other implement, and with the least effort on the part of the operator.

SPECIFICATIONS

TRANSMISSION

By Vee belt to gearbox. Then by bullwheel and pinion gears to land-wheels and 5/8" pitch roller chain drive to rotor.

CONTROLS

1. Throttle control by lever and cable.
2. Clutch control by Bowden cable.
3. Gear lever gives two speeds and spring-out safety reverse.
4. Separate Rotor Selector.
5. Depth Control by adjustable hand lever.
6. Engine cut-out switch.
7. Handlebars adjustable for height and sideswing.

CLUTCH

Bi-metal Cone Clutch operated by Bowden cable.

TYRES

400 x 8 Traction Tread tyres.

LAND SPEEDS

(at 3,600 engine r.p.m.)

From .7 m.p.h. (1.2 k.p.h.) in first gear low ratio, to 8 m.p.h. (8.2 k.p.h.) in second gear high ratio.

Reverse 1.3 m.p.h. (2 k.p.h.) and 2.5 m.p.h. (4 k.p.h.)

DIMENSIONS

Length—61" (155 cms)

Minimum height to top of handlebars, blades on the ground—38" (96 cms)

Overall width at rotor level—
16" rotor—17½" (44 cms)
23" rotor—24½" (62 cms)

Weight (with 16" rotor)—
350-354 lbs. (115 kgs.)

HOWARD ROTAVATOR

HOWARD ROTAVATOR PTY. LTD.
BOUNDARY ROAD, NORTHMEAD, N.S.W.
TEL.: 630 1231. TELEX 21328

A member of the Rotary Hoes Group, the World's largest manufacturer of Rotary Tillage equipment.

UNITED KINGDOM • EAST AFRICA • FRANCE • GERMANY • ITALY • NEW ZEALAND • SOUTH AFRICA
SPAIN • U.S.A.

Printed in Australia AUS/35.68

HOWARD
ROTAVATOR

300

power and versatility for the

grower and gardener

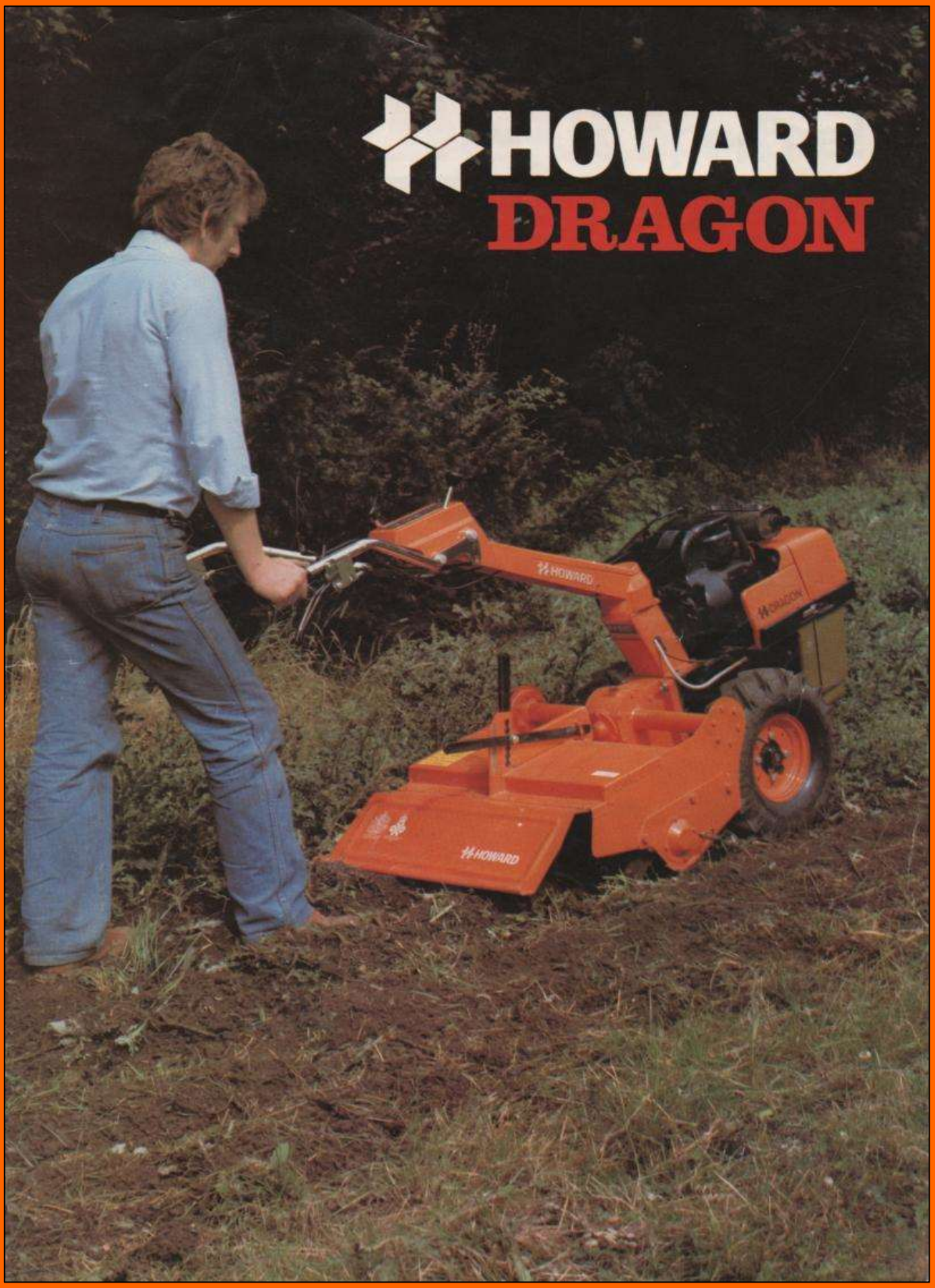
HOWARD
DRAGON

HOWARD
ROTAVATOR

CUT ALL GRASSES, HAY, CEREAL CROPS AS YOU HAVE NEVER CUT BEFORE!

HOWARD HAYLINE FOR '70

The Howard Hayline for '70. A completely new range of Rotacutters, 60", 72", 96", all with exclusive Howard Hayline Blade, a new concept of hay making, with up to a 10" sharp cutting edge.

The new blade cuts as no other blade has cut before. To see it demonstrated is the only way. Words cannot adequately describe the work efficiency of the blade together with the patented "Selectacut" 4-speed gear box, which gives positive spindle speeds from 500 to 1,200 RPM at full tractor power.

Three models in the Howard Rotacutter range—60", 72", 96". Each model quickly converts to a normal slasher.

Introducing another exclusive Howard feature—the new swept back

HAYLINE BLADE

The exclusive Howard 4-speed gear box to give positive spindle speeds from 500 to 1200 RPM at full tractor power.

HOWARD ROTAVATOR PTY. LTD.

Boundary Road, Northmead, N.S.W. Telephone 630.1231

Boundary Road, Northmead, N.S.W. 2152. Tel.: 630-1231.
Princes Highway, Dandenong, Victoria 3175. Tel.: 791-7460.
Lysaght Street, Acacia Ridge, Queensland 4110. Tel.: 93-1133.
Sweet Street, Townsville, Queensland 4810. Tel.: 9-2094.

HOWARD ROTAVATOR

Reader information service no. 55

HR5715R

Exclusive Howard "Selectaspeed" gearbox allows the blade tip speed to match the material being cut

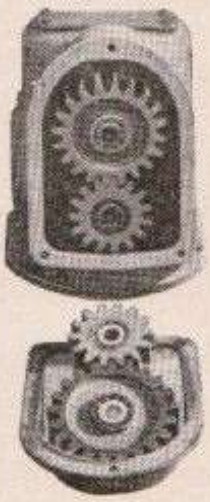

HOWARD ROTASLASHER

the machine for pasture topping, scrub clearing and most other jobs

The Howard Rotaslasher will cut it down to size—faster, more efficiently, with the renowned Howard reliability. Only the Howard Rotaslasher has the patented "Selecta-speed" 4-speed gearbox to give positive spindle speeds from 500 to 1,200 r.p.m. at full tractor power. Suitable for all 3 pt. linkage tractors up to 80 h.p.

Three models available: 48", 60", 72" width of cut. Fully shielded P.T.O. Universal Drive Standard fitting.

PRICES: F.O.R. Capital Cities

STANDARD ROTASLASHER	48"	$433.00
	60"	$529.00
	72"	$624.00
"SELECTASPEED" ROTASLASHER	48"	$538.00
	60"	$634.00
	72"	$729.00

HOWARD ROTAVATOR

HOWARD ROTAVATOR PTY. LTD.

Boundary Rd., Northmead, N.S.W. 2152

DISTRIBUTORS—N.S.W.: Howard Rotavator Pty. Ltd., Boundary Road, Northmead, 2152. **VIC. Metropolitan:** E. Hassett & Son Pty. Ltd., 24 Maroondah Highway, Ringwood, 3134. **Country:** Howard Rotavator Pty. Ltd., Princes Highway, Dandenong, 3175. **QLD.:** Howard Rotavator Pty. Ltd., Maynard and Sword Streets, Buranda, 4102.; Box 236, P.O., Hermit Park, Townsville, 4812. **TAS.:** Eric E. Howard & Son Pty. Ltd., 166-170 Murray Street, Hobart, 7000. **S.A.:** Power Plant Limited, 100 Currie Street, Adelaide, 5000. **W.A.:** Flower, Davies & Johnson Limited, 193-195 Great Eastern Highway, Belmont, 6104.

Howard Rotavator Pty. Ltd.
P.O. Box 82, Parramatta,
N.S.W. 2150.

Please send full information on the Howard Rotaslasher.

NAME .....

ADDRESS .....

Circle 50 on postcard for further information.

The 'All-Rounder' from Howard

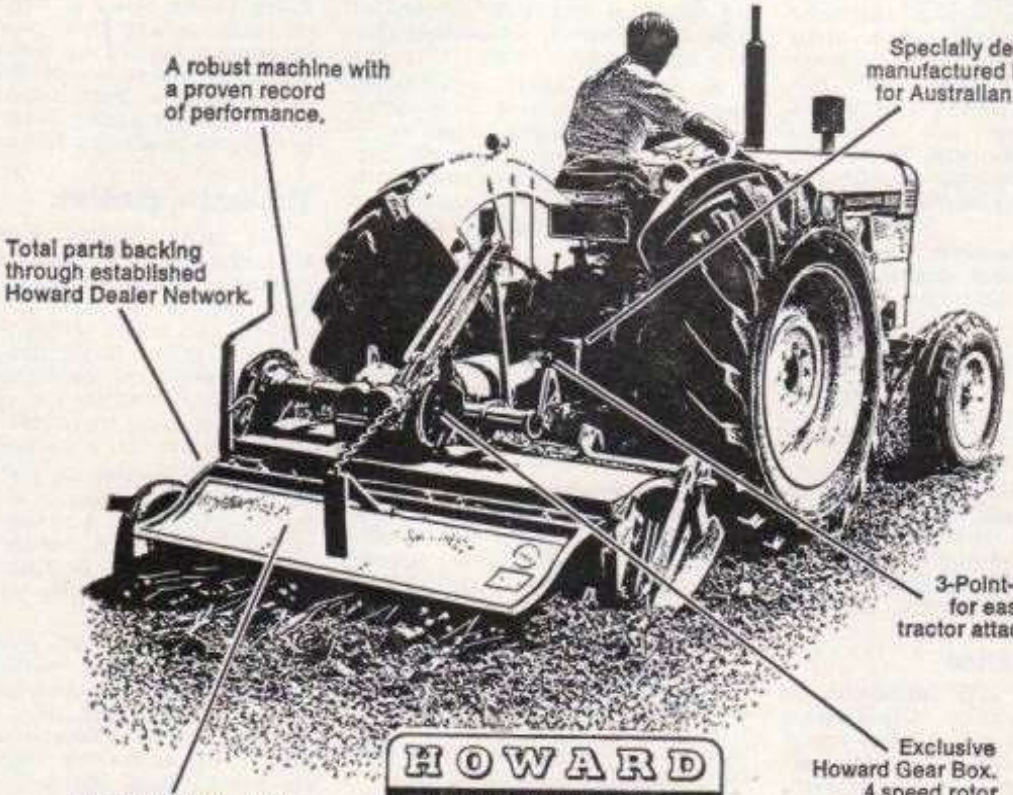

HOWARD ROTAVATOR

'E' Series

Nothing beats the Howard 'E' Series versatility for:—

• SEED BED PREPARATION • STUBBLE CLEARING • WEED CONTROL
• PASTURE RENOVATION • SUB SOIL FRACTURE • DRAINAGE • BED FORMING

Contact your Howard Rotavator Dealer for further information or a demonstration.

HOWARD ROTAVATOR PTY. LTD.

Boundary Road, Northmead, N.S.W. 2152. Tel.: 630 1231
P.O. Box 52, Acacia Ridge, Qld. 4110. Tel.: 93 1133
P.O. Box 236, Hermit Park, Townsville, Qld. 4810. Tel.: 79 2094, 79 7325

736.3932

Reader Information Service No. 14

HOWARD

ROTAVATOR® HR 8

HOWARD: LES EXPLOITS TERRESTRES

HOWARD
Rotavator HR 30
DANGER

HOWARD
Procut
Rollamowa
178

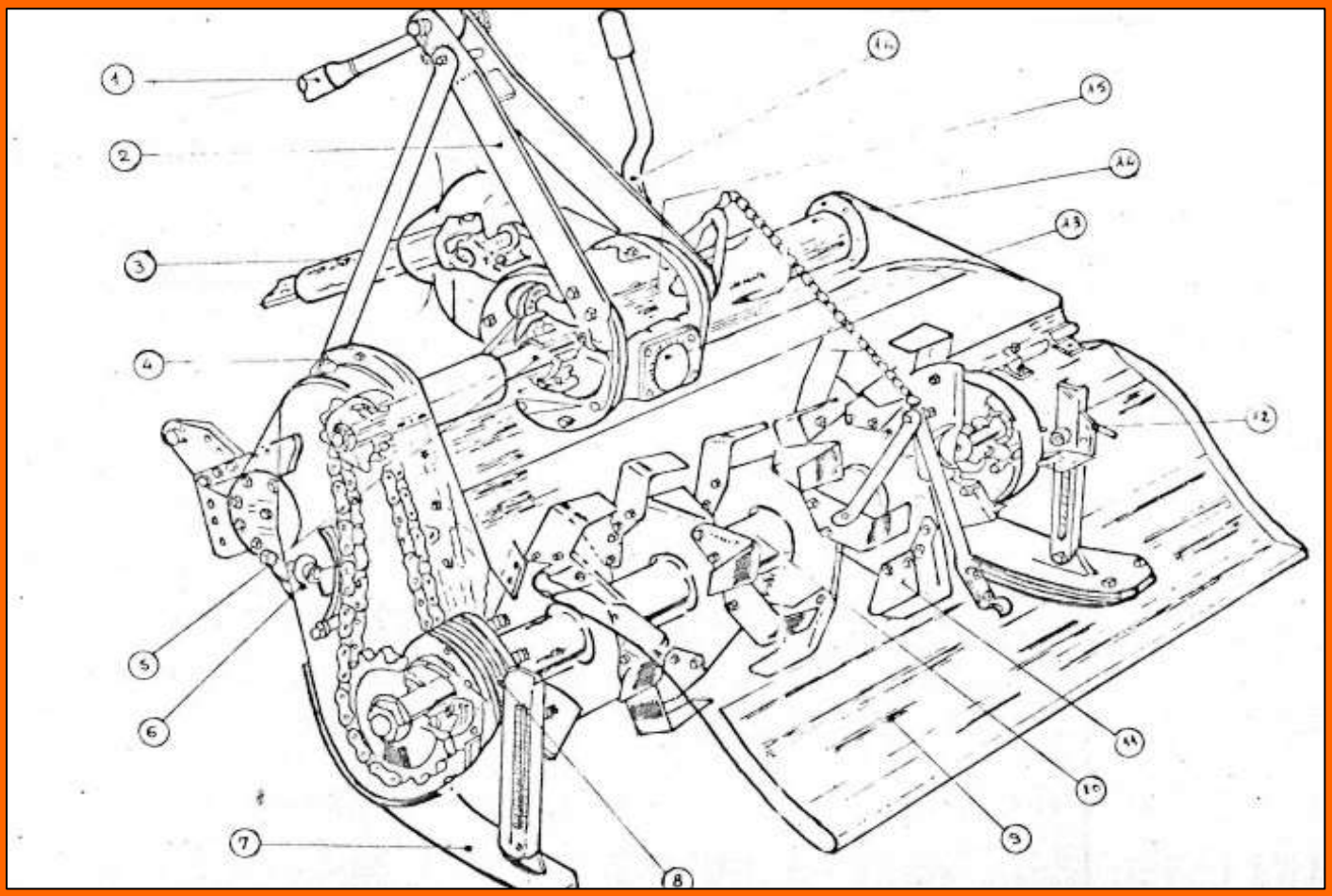
1
2
3
4
5
6
7
8
9
10
11
12
13
14
15

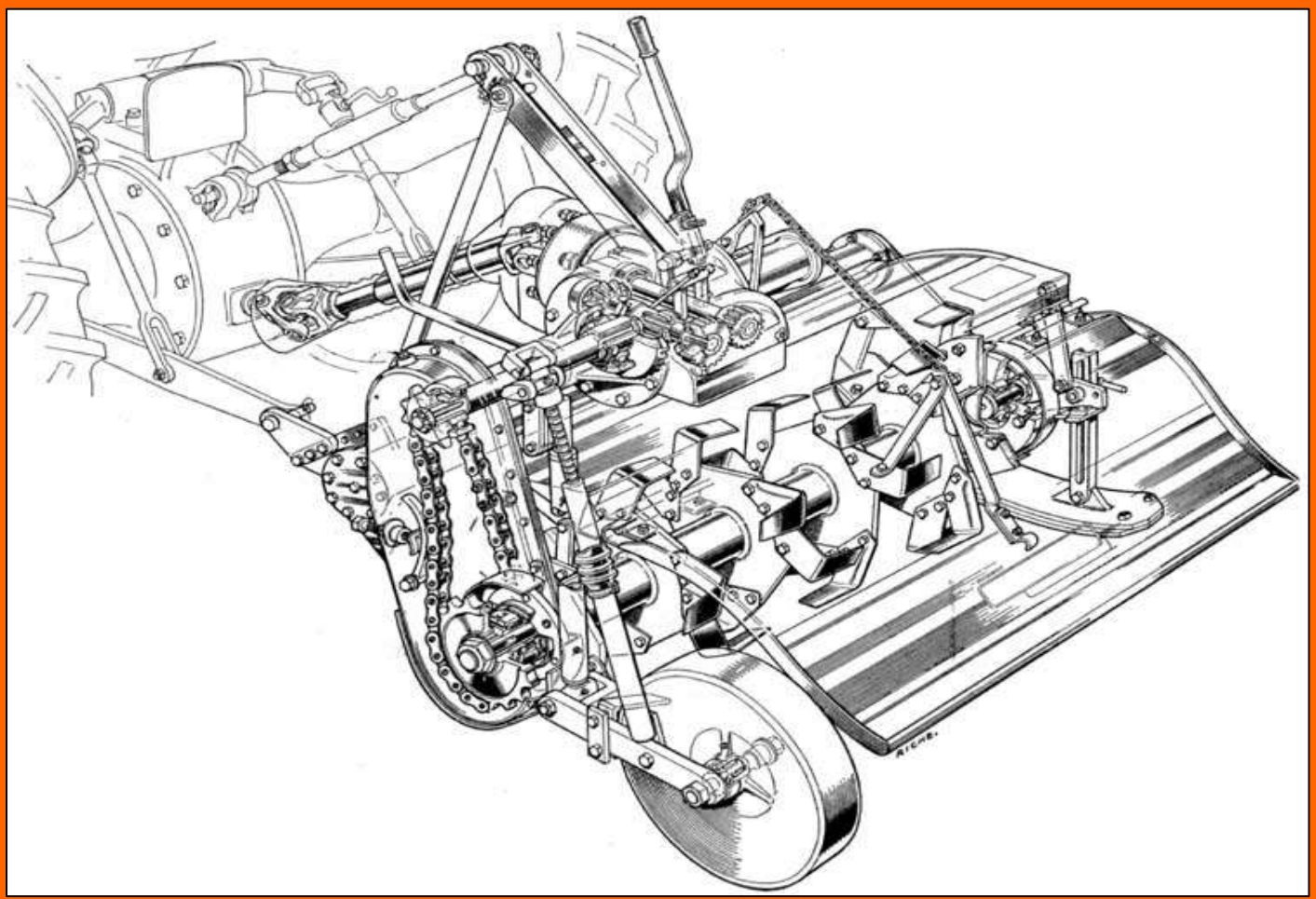

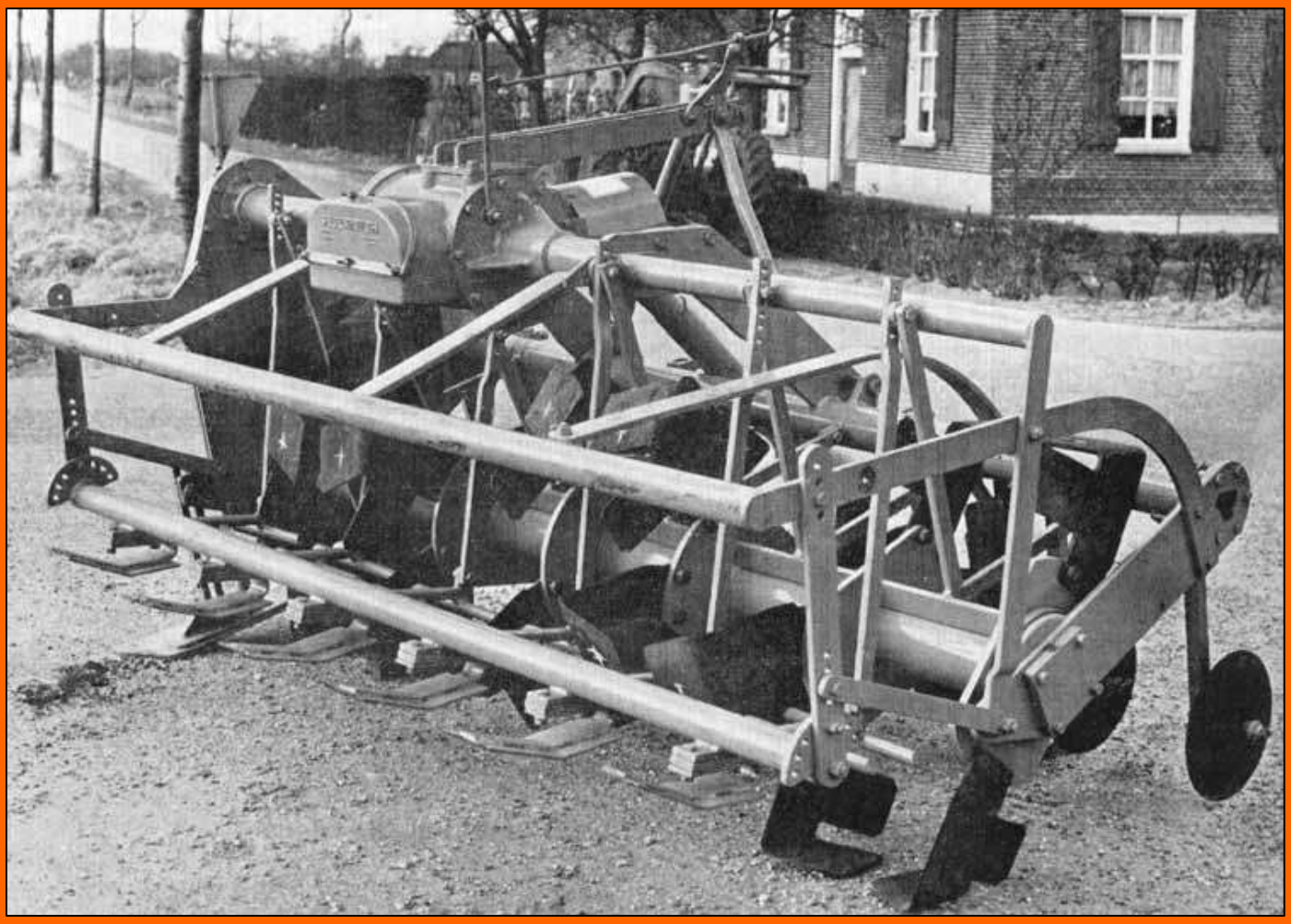

HR 20
HOWARD

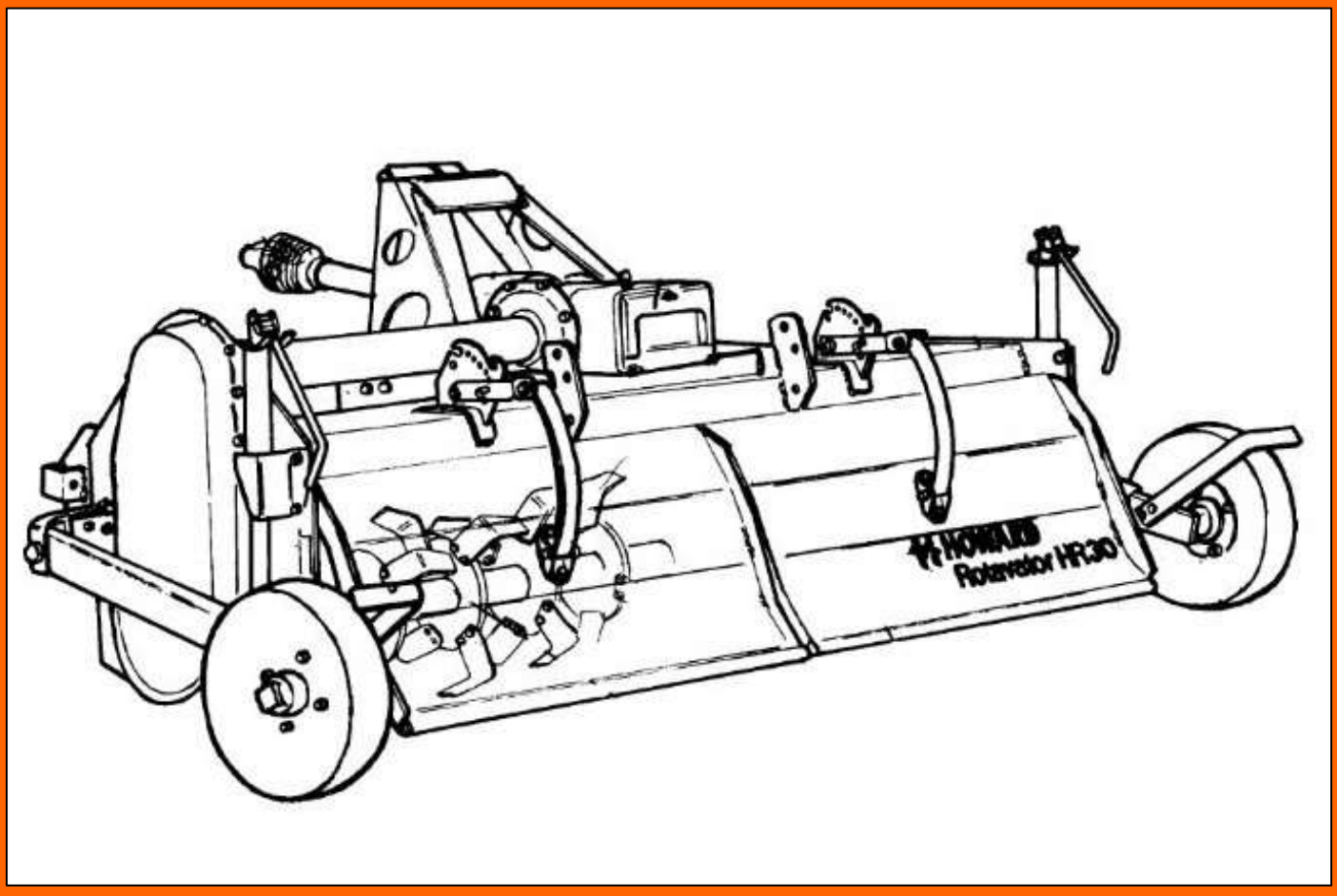
HOWARD
Rotavator HR30

HOWARD
HAYTIMER

Der neue Weg zu besserem Heu

mit dem

HOWARD Schlegelmäher

HOWARD ROTASPREADER

Eine echte Neuheit auf dem Gebiet der Dungstreuung

HOWARD ROTAVATOR

HOWARD Rotastreuer

...der Stalldungstreuer mit überzeugenden Vorteilen

- Einfache Konstruktion
- Ganzstahl-ausführung
- Wenig beweg-liche Teile
- Geringer Verschleiß
- Weniger Reparaturen

Die Unterhaltungskosten bestimmen die Wirtschaft-lichkeit einer Maschine:

Die HOWARD-ROTASTREUER SPR 100, 150 und 200 helfen in jedem landwirt-schaftlichen Betrieb und im Lohnunternehmen die Kosten zu senken!

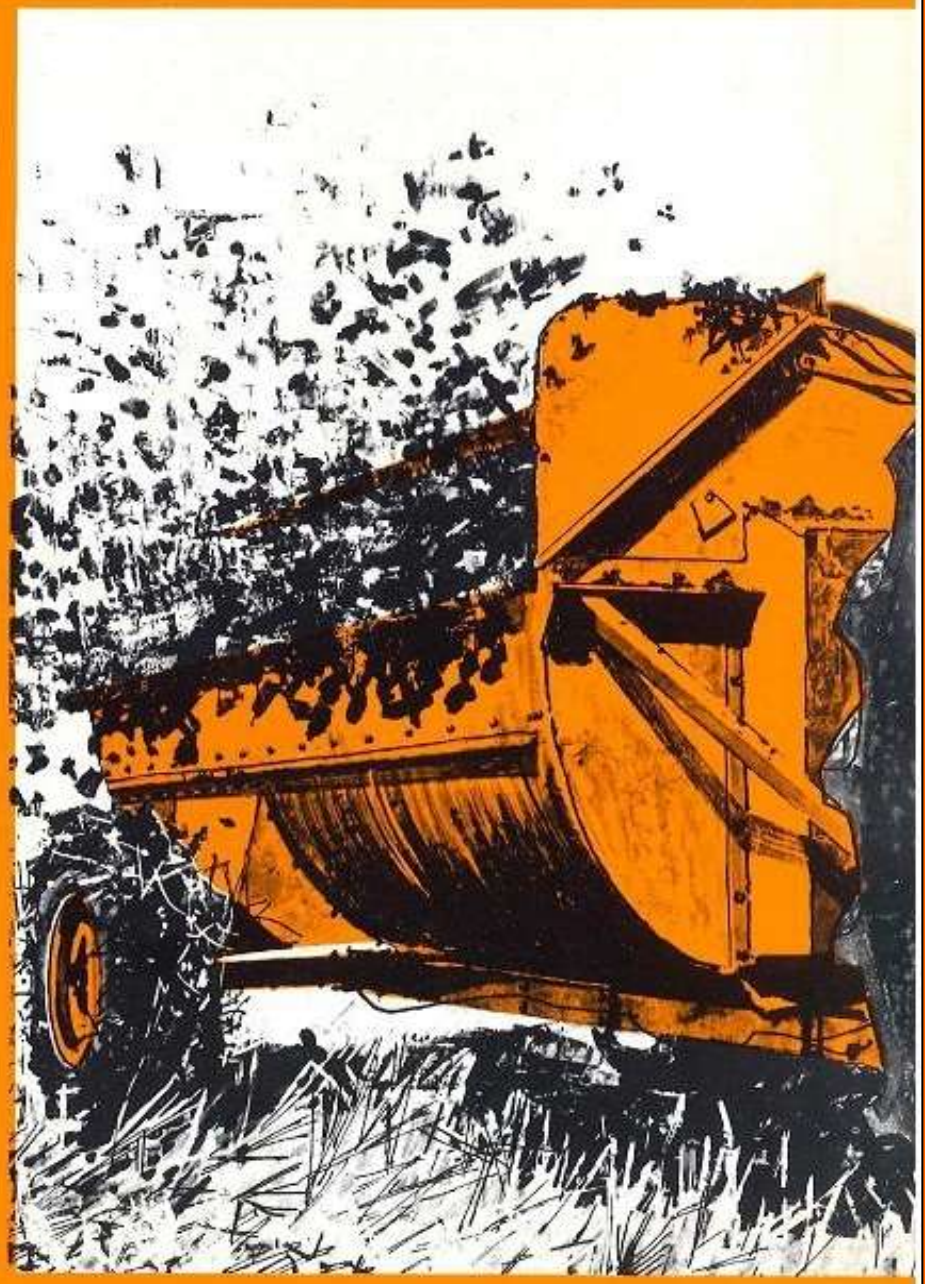

ROTAVATOR® Serie CA HOWARD

der preisgünstige Bodenkrümler für Gartenbau - Sonderkulturen und Landwirtschaft

419 A
ROTAVATOR
HOWARD
ROTAVATOR

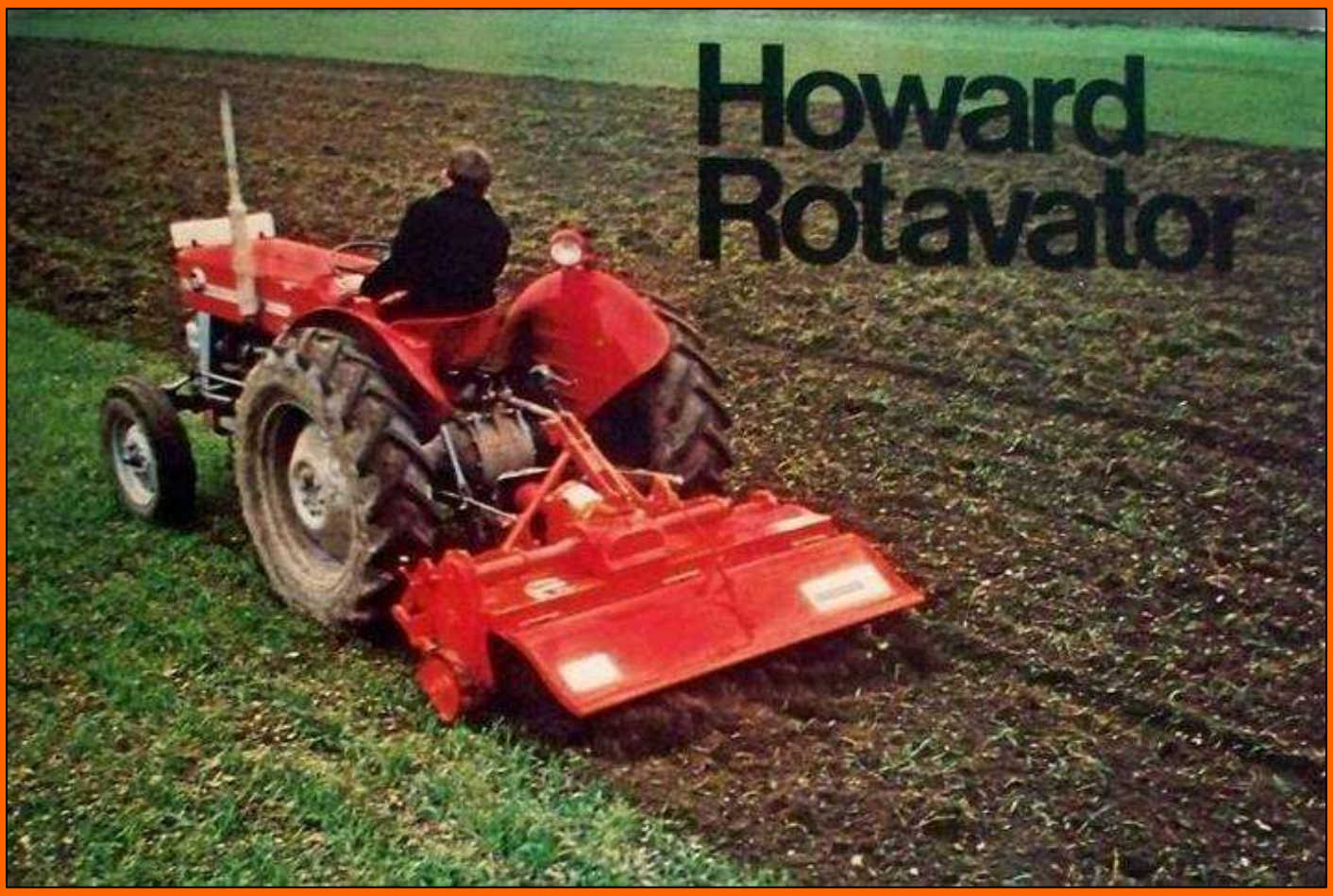
Howard
Rotavator

ROTAVATOR *Approved for use with the* **FORDSON MAJOR**

THE HOWARD
ROTAVATOR Tractor Attachment

Manufactured by

ROTARY HOES LTD., HORNDON, ESSEX

Howard Rotavator

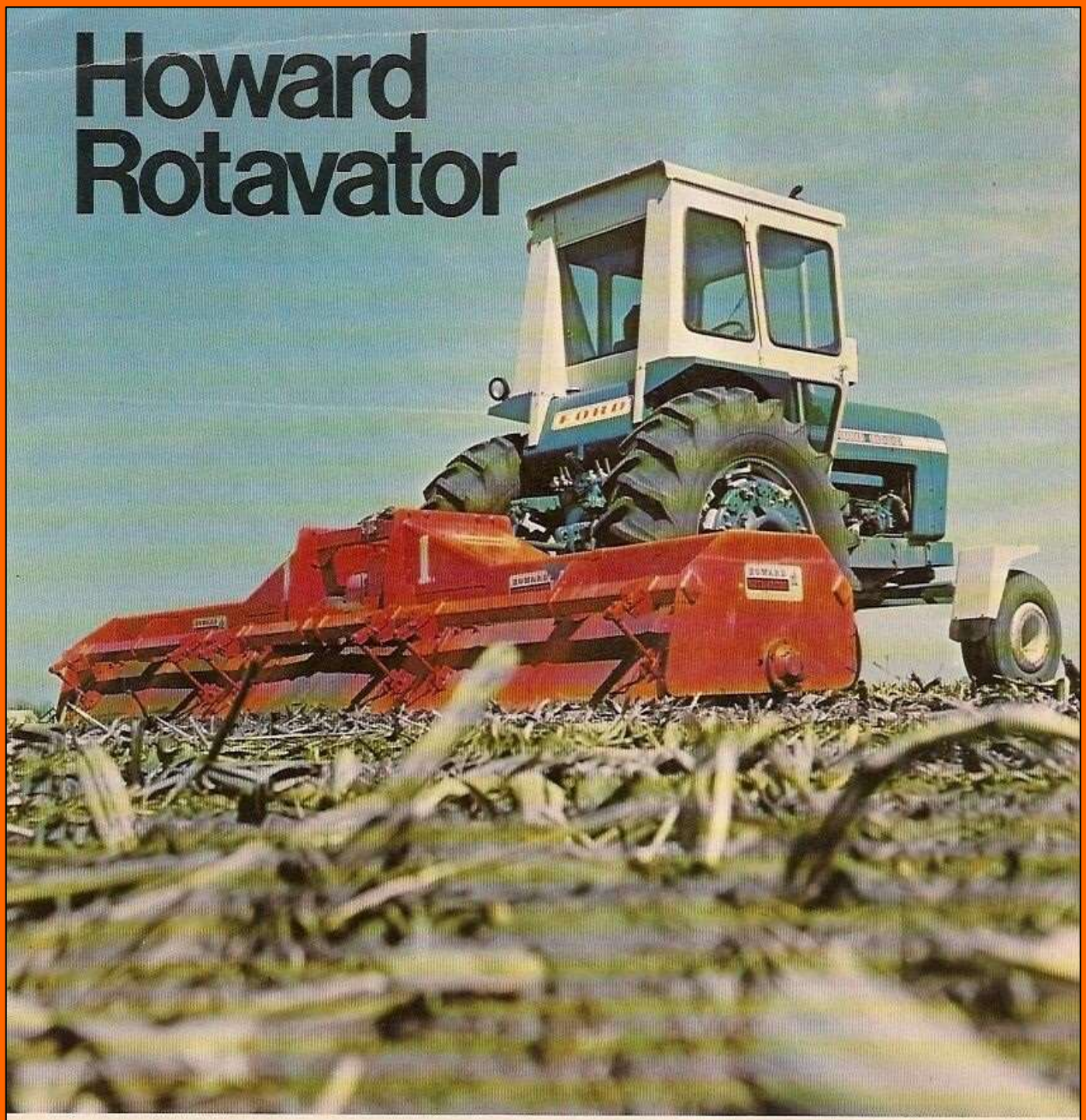

Model ST

For tractors of 90 H.P. and up . . . designed for secondary tillage operations on large acreage farms and ranches. These Big Rotavators are capable of combining tillage, planting, fertilizing, and chemical incorporation in a single pass . . . preparing and planting up to nine acres per hour.

Tillage Widths: 160" to 180".

Tractor: For tractors of 90 H.P. and up with 1,000 rpm P.T.O.

Linkage: Category II 3 point linkage.

Tillage Depth: Adjustable to 6".

Rotor Speeds: Multiple speeds available with "Selectatilth" gearbox.

Planting and cultivating kits available.

HOWARD
ROTAVATOR

HOWARD
ROTAVATOR
600

HOWARD
ROTAVATOR 200

HOWARD
ROTAVATOR 310

HOWARD
540

HOWARD